CANYON AIR
PRODUCTS INC

INDUCTION UNITS

Low Noise
Single or Dual Circuit
High-Boy or Low-Boy
New or Retrofit Applications

CAT 03-07-001

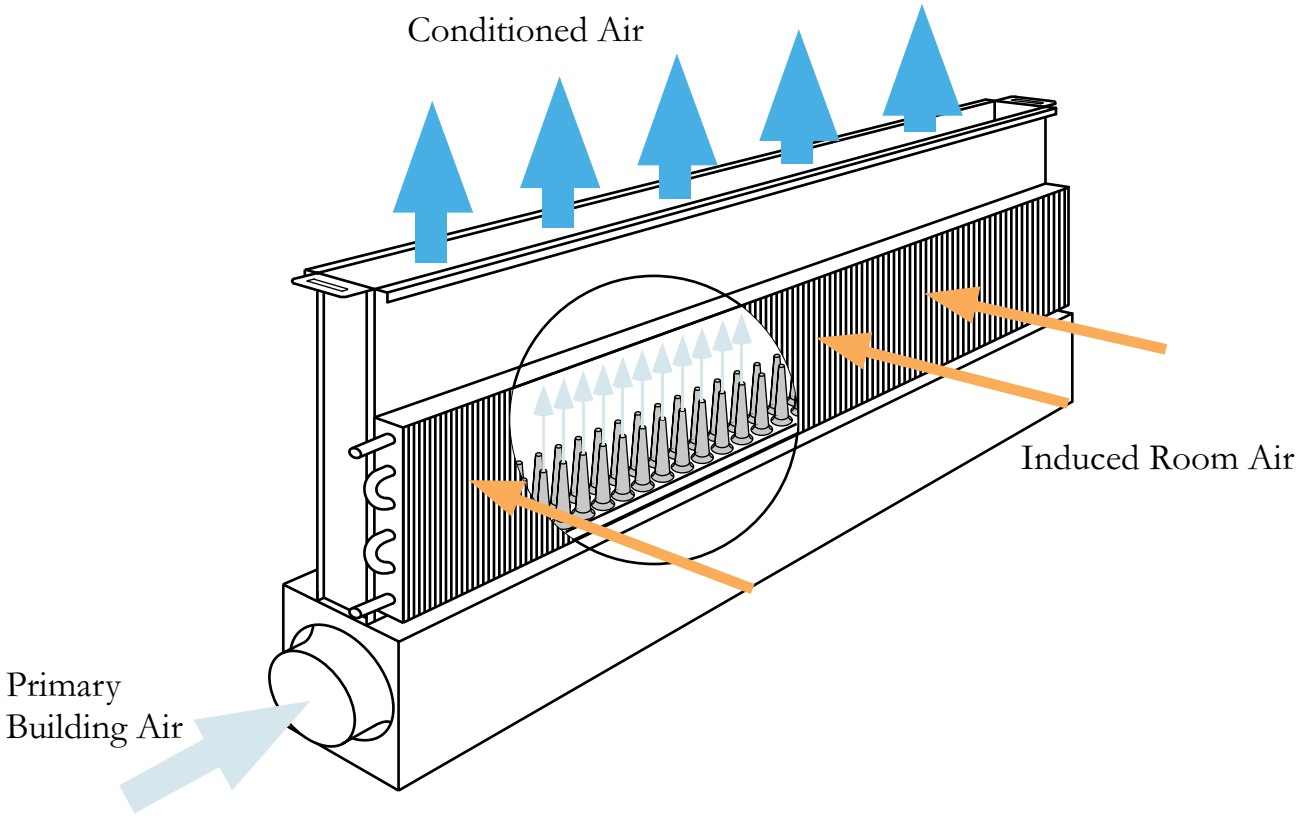

Principle of Operation

A. Pre-conditioned primary air enters the primary air plenum. This air passes over internal baffles for sound attenuation prior to entering the nozzles. A balancing damper is used for volume control.

B. The primary air exits the primary air plenum through efficiently designed aerodynamic nozzles. The smooth laminar flow from the nozzles creates a negative pressure in the mixed air plenum.

C. The negative pressure in the mixed air plenum induces room air across the cooling coil.

D. The primary air is mixed with the conditioned room air and discharges from the mixed air plenum and into the space.

See-through picture of High-Boy unit showing nozzles

Sample Selection

Determine if a high unit (Model HB) or a low unit (Model LB) is suitable for the application.
Do length restrictions exist?

For example, assume that a tall unit (Model HB) not to exceed 40" long will be suitable. Therefore, select a model HB036 (see page 4 for performance data).

Determine available or required primary air and corresponding pressure ("w.g.)
Assume that 65 cfm is available for this unit.

There is a choice of 2 Nozzle Plates.

Nozzle Plate	Coil Capacity (Btu/hr)	Air Pressure Drop (in.w.g)
B	4,561	1.62
C	4,219	1.08

Note that nozzle plate B has the highest coil capacity with the trade off of higher pressure requirement.

Assume that we want as much capacity as possible without exceeding 1.2" w.g. pressure drop. Therefore, nozzle plate C is the best selection.

The total cooling capacity consists of 2 components (i.e. Primary Air Capacity plus the Coil Capacity).

Primary Air Capacity:
This capacity is shown as 1,411 Btu/hr for 65 cfm

This capacity is based on the primary air being 20F cooler than the room air temperature (i.e. Troom-Tprimary air). The capacity is calculated as follows :
1.085 x 65 cfm x 20F (where 1.085 is a constant)

If Troom - Tprimary air is different than 20F, adjust accordingly.

Assume that our Troom-Tprimary air is only 15F, then the capacity will be:
1.085 x 65 cfm x 15F (1,058 Btu/hr)

Coil Capacity:
Coil capacity is based on the following standard conditions:
Troom - Tentering water of 25F
1.5 gpm water flow

For water flow rates other than 1.5 gpm, refer to the "Coil Capacity Correction Factors" table below the performance charts (Page 6).

Assume the water flow rate is 1.25 gpm. For size 036, this would result in a correction factor of 0.96 resulting in the following:
Corrected Coil Capacity of 4,050 Btu/hr (i.e. 4,219 Btu/hr x 0.96)

Total Capacity

The total capacity would be the sum of the Primary Air Capacity and the Coil Capacity

Total Capacity is 5,108 Btu/hr (i.e. 1,058 Btu/hr + 4,050 Btu/hr)

Performance Charts

HB-Series Size 021

Primary Air		Nozzle Plate #A		Nozzle Plate #B		Nozzle Plate #C		Nozzle Plate #D		Nozzle Plate #E	
	Capacity	Coil Cap.	Air	Coil Cap.	Air	Coil Cap.	Air	Coil Cap.	Air	Coil Cap.	Air
		Cooling	P.D.	Cooling	P.D.	Cooling	P.D.	Cooling	P.D.	Cooling	P.D.
(cfm)	(BtuH)	(BtuH)	in.w.g.	(BtuH)	in.w.g.	(BtuH)	in.w.g.	(BtuH)	in.w.g.	(BtuH)	in.w.g.
20	434	1954	1.19								
25	543	2300	1.86								
30	651	2616	2.67	2436	1.23						
35	760			2619	1.68	2436	1.06				
40	868			2827	2.19	2582	1.38				
45	977			3016	2.77	2769	1.74	2691	0.95		
50	1085					2931	2.15	2852	1.17		
55	1194					3089	2.60	3008	1.42	2691	0.79
60	1302					3228	3.09	3146	1.68	2827	0.95
65	1411							3281	1.98	2955	1.11
70	1519							3401	2.31	3075	1.29
75	1628							3520	2.65	3187	1.47
80	1736									3294	1.68
85	1845									3395	1.89
90	1953									3491	2.12
95	2062									3582	2.36

Fluid Pressure Drop (Based on 1.5 gpm, 2.70 ft.w.g.)

HB-Series Size 027

Primary Air		Nozzle Plate #A		Nozzle Plate #B		Nozzle Plate #C		Nozzle Plate #D		Nozzle Plate #E	
	Capacity	Coil Cap.	Air	Coil Cap.	Air	Coil Cap.	Air	Coil Cap.	Air	Coil Cap.	Air
		Cooling	P.D.	Cooling	P.D.	Cooling	P.D.	Cooling	P.D.	Cooling	P.D.
(cfm)	(BtuH)	(BtuH)	in.w.g.	(BtuH)	in.w.g.	(BtuH)	in.w.g.	(BtuH)	in.w.g.	(BtuH)	in.w.g.
30	651	2809	1.51								
35	760	3145	2.05								
40	868	3296	2.67	3218	1.23						
45	977	3529	3.39	3332	1.56	3133	0.99				
50	1085			3537	1.93	3232	1.21				
55	1194			3726	2.33	3419	1.49				
60	1302			3902	2.77	3586	1.76	3487	0.99		
65	1411					3749	2.04	3649	1.16	3259	0.63
70	1519					3895	2.37	3793	1.32	3402	0.73
75	1628							3937	1.49	3537	0.83
80	1736							4065	1.68	3665	0.95
85	1845							4193	1.90	3786	1.07
90	1953							4308	2.15	3902	1.20
95	2062							4423	2.38	4012	1.33
100	2170							4527	2.64	4117	1.47
105	2279									4218	1.63
110	2387									4314	1.78
115	2496									4406	1.95
120	2604									4495	2.12

Fluid Pressure Drop (Based on 1.5 gpm, 2.90 ft.w.g.)

HB-Series Size 036

Primary Air		Nozzle Plate #A		Nozzle Plate #B		Nozzle Plate #C		Nozzle Plate #D		Nozzle Plate #E	
	Capacity	Coil Cap.	Air	Coil Cap.	Air	Coil Cap.	Air	Coil Cap.	Air	Coil Cap.	Air
		Cooling	P.D.	Cooling	P.D.	Cooling	P.D.	Cooling	P.D.	Cooling	P.D.
(cfm)	(BtuH)	(BtuH)	in.w.g.	(BtuH)	in.w.g.	(BtuH)	in.w.g.	(BtuH)	in.w.g.	(BtuH)	in.w.g.
35	760	3405	1.08								
40	868	3744	1.42								
45	977	4082	1.79								
50	1085	4159	2.21	4094	0.96						
55	1194	4396	2.67	4150	1.16	3920	0.77				
60	1302			4362	1.38	4126	0.92				
65	1411			4561	1.62	4219	1.08				
70	1519			4747	1.88	4354	1.25	4231	0.65		
75	1628			4922	2.16	4529	1.44	4405	0.74		
80	1736			5087	2.46	4686	1.63	4561	0.84		
85	1845					4843	1.85	4717	0.95	4223	0.56
90	1953					4985	2.07	4858	1.06	4362	0.64
95	2062					5127	2.31	4999	1.18	4496	0.70
100	2170							5127	1.31	4624	0.78
105	2279							5256	1.44	4747	0.86
110	2387							5374	1.58	4865	0.95
115	2496							5492	1.73	4978	1.03
120	2604							5600	1.88	5087	1.12
125	2713							5709	2.04	5193	1.22
130	2821									5294	1.32
135	2930									5392	1.43
140	3038									5486	1.54

Fluid Pressure Drop (Based on 1.5 gpm, 3.30 ft.w.g.)

Performance Charts

HB-Series Size 048

Primary Air		Nozzle Plate #A		Nozzle Plate #B		Nozzle Plate #C		Nozzle Plate #D		Nozzle Plate #E	
	Capacity	Coil Cap.	Air	Coil Cap.	Air	Coil Cap.	Air	Coil Cap.	Air	Coil Cap.	Air
		Cooling	P.D.	Cooling	P.D.	Cooling	P.D.	Cooling	P.D.	Cooling	P.D.
(cfm)	(BtuH)	(BtuH)	in.w.g.	(BtuH)	in.w.g.	(BtuH)	in.w.g.	(BtuH)	in.w.g.	(BtuH)	in.w.g.
45	977	4366	0.96								
50	1085	4705	1.19								
55	1194	5049	1.44	4692	0.64						
60	1302	5028	1.72	4999	0.76						
65	1411	5268	2.01	5190	0.89	4731	0.58				
70	1519	5484	2.33	5298	1.02	4986	0.67				
75	1628	5696	2.67	5394	1.18	5119	0.77				
80	1736			5588	1.34	5248	0.88				
85	1845			5771	1.52	5302	1.00				
90	1953			5946	1.69	5468	1.11				
95	2062			6111	1.89	5635	1.27	5484	0.66		
100	2170			6269	2.10	5786	1.38	5635	0.72		
105	2279			6420	2.32	5939	1.53	5786	0.77		
110	2387					6078	1.66	5924	0.87		
115	2496					6218	1.82	6064	0.94	5460	0.56
120	2604					6346	1.98	6191	1.02	5588	0.61
125	2713					6475	2.15	6321	1.10	5711	0.66
130	2821					6594	2.32	6439	1.21	5830	0.72
135	2930							6559	1.30	5946	0.77
140	3038							6668	1.38	6057	0.83
145	3147							6780	1.49	6165	0.88
150	3255							6883	1.60	6269	0.95
155	3364							6987	1.71	6371	1.01
160	3472							7083	1.82	6469	1.08
165	3581							7181	1.94	6564	1.14
170	3689							7271	2.06	6657	1.21
175	3798							7363	2.18	6747	1.29
180	3906							7448	2.31	6835	1.36
185	4015									6920	1.44

Fluid Pressure Drop (Based on 1.5 gpm, 3.80 ft.w.g.)

LB-Series Size 021

Primary Air		Nozzle Plate #A		Nozzle Plate #B		Nozzle Plate #C		Nozzle Plate #D		Nozzle Plate #E	
	Capacity	Coil Cap.	Air	Coil Cap.	Air	Coil Cap.	Air	Coil Cap.	Air	Coil Cap.	Air
		Cooling	P.D.	Cooling	P.D.	Cooling	P.D.	Cooling	P.D.	Cooling	P.D.
(cfm)	(BtuH)	(BtuH)	in.w.g.	(BtuH)	in.w.g.	(BtuH)	in.w.g.	(BtuH)	in.w.g.	(BtuH)	in.w.g.
20	434	1709	1.19								
25	543	2007	1.86								
30	651	2288	2.67	2213	1.23						
35	760			2472	1.68	2387	1.06				
40	868			2619	2.19	2627	1.38				
45	977			2802	2.77	2726	1.74	2162	0.95		
50	1085					2892	2.15	2325	1.17		
55	1194					3045	2.60	2496	1.42	2424	0.79
60	1302					3187	3.09	2630	1.68	2580	0.95
65	1411							2704	1.98	2628	1.11
70	1519							2802	2.31	2743	1.29
75	1628							2916	2.65	2852	1.47
80	1736									2955	1.68
85	1845									3053	1.89
90	1953									3146	2.12
95	2062									3235	2.36

Fluid Pressure Drop (Based on 1.5 gpm, 2.70 ft.w.g.)

LB-Series Size 027

Primary Air		Nozzle Plate #A		Nozzle Plate #B		Nozzle Plate #C		Nozzle Plate #D		Nozzle Plate #E	
	Capacity	Coil Cap.	Air	Coil Cap.	Air	Coil Cap.	Air	Coil Cap.	Air	Coil Cap.	Air
		Cooling	P.D.	Cooling	P.D.	Cooling	P.D.	Cooling	P.D.	Cooling	P.D.
(cfm)	(BtuH)	(BtuH)	in.w.g.	(BtuH)	in.w.g.	(BtuH)	in.w.g.	(BtuH)	in.w.g.	(BtuH)	in.w.g.
30	651	2456	1.51								
35	760	2745	2.05								
40	868	3022	2.67	2922	1.23						
45	977	3290	3.39	3181	1.56	3071	0.99				
50	1085			3278	1.93	3314	1.21				
55	1194			3462	2.33	3367	1.49				
60	1302			3633	2.77	3537	1.76	2847	0.99		
65	1411					3696	2.04	3022	1.16	2934	0.63
70	1519					3844	2.37	3181	1.32	3096	0.73
75	1628							3299	1.49	3199	0.83
80	1736							3351	1.68	3259	0.95
85	1845							3453	1.90	3376	1.07
90	1953							3561	2.15	3487	1.20
95	2062							3672	2.38	3594	1.33
100	2170							3771	2.64	3696	1.47
105	2279									3793	1.63
110	2387									3887	1.78
115	2496									3978	1.95
120	2604									4065	2.12

Fluid Pressure Drop (Based on 1.5 gpm, 2.90 ft.w.g.)

Performance Charts

LB-Series Size 036											
Primary Air		Nozzle Plate #A		Nozzle Plate #B		Nozzle Plate #C		Nozzle Plate #D		Nozzle Plate #E	
	Capacity	Coil Cap.	Air	Coil Cap.	Air	Coil Cap.	Air	Coil Cap.	Air	Coil Cap.	Air
		Cooling	P.D.	Cooling	P.D.	Cooling	P.D.	Cooling	P.D.	Cooling	P.D.
(cfm)	(BtuH)	(BtuH)	in.w.g.	(BtuH)	in.w.g.	(BtuH)	in.w.g.	(BtuH)	in.w.g.	(BtuH)	in.w.g.
35	760	2969	1.08								
40	868	3270	1.42								
45	977	3563	1.79								
50	1085	3844	2.21	3718	0.96						
55	1194	4119	2.67	3983	1.16	3844	0.77				
60	1302			4199	1.38	4094	0.92				
65	1411			4260	1.62	4113	1.08				
70	1519			4413	1.88	4293	1.25	3445	0.65		
75	1628			4585	2.16	4463	1.44	3628	0.74		
80	1736			4747	2.46	4624	1.63	3793	0.84		
85	1845					4777	1.85	3970	0.95	3856	0.56
90	1953					4922	2.07	4131	1.06	4020	0.64
95	2062					5061	2.31	4205	1.18	4113	0.70
100	2170							4299	1.31	4181	0.78
105	2279							4328	1.44	4231	0.86
110	2387							4438	1.58	4345	0.95
115	2496							4553	1.73	4455	1.03
120	2604							4655	1.88	4561	1.12
125	2713							4762	2.04	4663	1.22
130	2821									4762	1.32
135	2930									4858	1.43
140	3038									4950	1.54

Fluid Pressure Drop (Based on 1.5 gpm, 3.30 ft.w.g.)

LB-Series Size 048											
Primary Air		Nozzle Plate #A		Nozzle Plate #B		Nozzle Plate #C		Nozzle Plate #D		Nozzle Plate #E	
	Capacity	Coil Cap.	Air	Coil Cap.	Air	Coil Cap.	Air	Coil Cap.	Air	Coil Cap.	Air
		Cooling	P.D.	Cooling	P.D.	Cooling	P.D.	Cooling	P.D.	Cooling	P.D.
(cfm)	(BtuH)	(BtuH)	in.w.g.	(BtuH)	in.w.g.	(BtuH)	in.w.g.	(BtuH)	in.w.g.	(BtuH)	in.w.g.
45	977	3807	0.96								
50	1085	4109	1.19								
55	1194	4405	1.44	4259	0.64						
60	1302	4692	1.72	4538	0.76						
65	1411	4973	2.01	4807	0.89	4641	0.58				
70	1519	5137	2.33	5074	1.02	4897	0.67				
75	1628	5248	2.67	5190	1.18	5043	0.77				
80	1736			5299	1.34	5148	0.88				
85	1845			5369	1.52	5225	1.00				
90	1953			5540	1.69	5394	1.11				
95	2062			5704	1.89	5556	1.27	4603	0.66		
100	2170			5860	2.10	5711	1.38	4769	0.72		
105	2279			6009	2.32	5860	1.53	4948	0.77		
110	2387					6002	1.66	5112	0.87		
115	2496					6138	1.82	5207	0.94	5137	0.56
120	2604					6269	1.98	5251	1.02	5208	0.61
125	2713					6396	2.15	5286	1.10	5253	0.66
130	2821					6517	2.32	5319	1.21	5298	0.72
135	2930							5435	1.30	5319	0.77
140	3038							5540	1.38	5427	0.83
145	3147							5650	1.49	5532	0.88
150	3255							5749	1.60	5635	0.95
155	3364							5852	1.71	5734	1.01
160	3472							5946	1.82	5830	1.08
165	3581							6043	1.94	5924	1.14
170	3689							6132	2.06	6016	1.21
175	3798							6224	2.18	6105	1.29
180	3906							6308	2.31	6191	1.36
185	4015									6276	1.44

Fluid Pressure Drop (Based on 1.5 gpm, 3.80 ft.w.g.)

*Notes: Capacity of the HBr (reduced height) model is the same as the LB-Series units.
For 4-pipe coils, please contact factory.

Ratings based on 80db/67wb EAT, 55 EWT, 1.5 gpm

Coil Capacity Correction Factors				
GPM	Size			
	21	27	36	48
1.00	0.91	0.92	0.91	0.88
1.25	0.97	0.97	0.96	0.95
1.50	1.00	1.00	1.00	1.00
1.75	1.03	1.04	1.03	1.04
2.00	1.05	1.06	1.06	1.07

Dimensions

Models HB-021 thru HB-048 and HBr-021 thru HBr-048

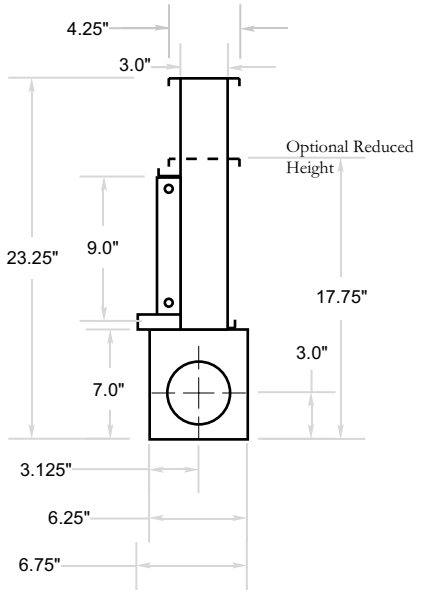

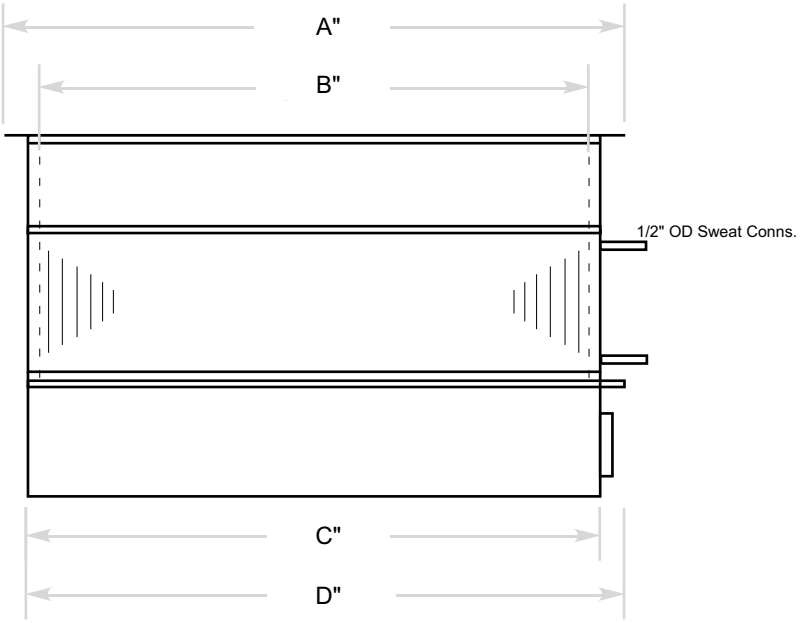

Models LB-021 thru LB-048

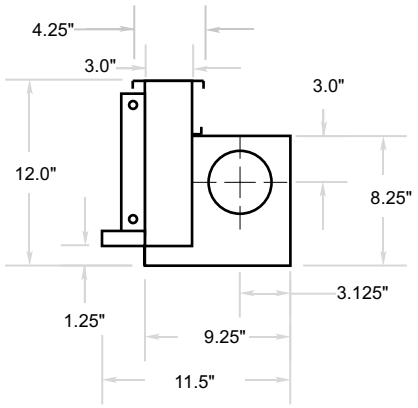

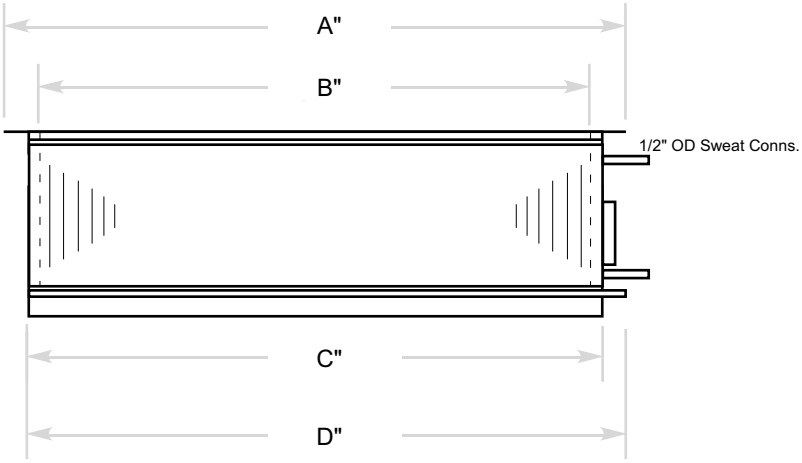

HB, LB				
Inches	021	027	036	048
A	22-7/8	29-1/8	38-1/2	50
B	19-7/8	26-1/8	35-1/2	47
C	20-7/8	27-1/8	36-1/2	48
D	23-3/8	29-5/8	39	50-1/2

Specifications

Induction units shall be manufactured by Canyon Air Products Inc. (905-791-1400) sized as per the schedule with the following features:

Cabinet shall be minimum 22 gauge G-90 galvanized steel with 4 inch primary air connection available as left or right hand or both ends for series connection. Nozzle plenum shall have insulated sound baffles to reduce breakout noise. The nozzle bank shall have 5 different nozzle plate configurations to match primary air with induced air. Nozzles shall be manufactured of heat resistant polyethylene and designed for quiet laminar discharge to promote efficient induction.

Coils shall have one row of smooth, seamless copper tubes, manufactured to ASME specifications and rated to ARI Standard 410. Tubes are mechanically expanded into aluminum fin collars for permanent bond with standard sweat connections. Fins are aluminum, die formed plate type. Unit shall feature a drip pan in the event of condensate. Coils shall be suitable for use up to 350 psig at 150 degF.

Optional Accessories:

Single ply lint screen
Single ply polyester filter
Locking cable actuated primary air damper

Notes: